HOW TO ORDER REPLACEMENT PARTS

To order replacement parts, contact the ICON Fitness Lifestyle Ltd. office, or write:

ICON Fitness Lifestyle Ltd.
Greenwich House
223 North Street
Sheepscar
Leeds LS7 2AA
West Yorkshire

Tel: Country Code:

0345-089009

Fax: 0113-2411120

When ordering parts, please be prepared to give the following information:

- The MODEL NUMBER OF THE PRODUCT (WETL48500)
- The NAME OF THE PRODUCT (WESLO CADENCE® 1000 treadmill)
- The SERIAL NUMBER OF THE PRODUCT (see the front cover of this manual)
- The KEY NUMBER OF THE PART(S) (see the PART LIST and the EXPLODED DRAWING attached in the centre of this manual)
- The DESCRIPTION OF THE PART(S) (see the PART LIST and the EXPLODED DRAWING attached in the centre of this manual)

PROFORM is a registered trademark of ICON Health & Fitness, Inc.

Part No. 164695 R0700A

Printed in USA © 2000 ICON Health & Fitness, Inc.

®WESLO cadence® 1000

Class HC Fitness Product

Model No. WETL48500
Serial No. _____

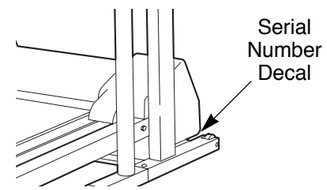

QUESTIONS?

As a manufacturer, we are committed to providing complete customer satisfaction. If you have questions, or if there are missing parts, we will guarantee complete satisfaction through our Customer Service Department.

Please CALL:

0345-089009

Or WRITE:
ICON Fitness Lifestyle Ltd.
Greenwich House
223 North Street
Sheepscar
Leeds LS7 2AA
West Yorkshire

⚠ CAUTION

Read all precautions and instructions in this manual before using this equipment. Save this manual for future reference.

USER'S MANUAL

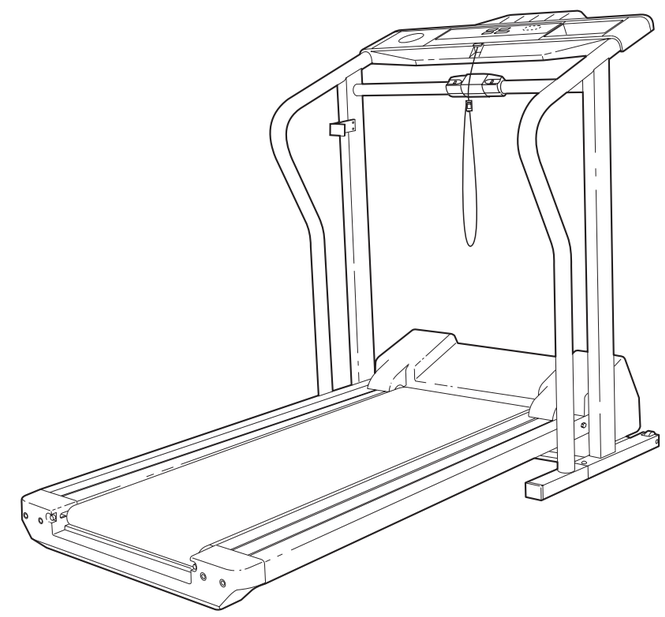

Visit our website at

www.weslo.com

new products, prizes, fitness tips, and much more!

TABLE OF CONTENTS

IMPORTANT PRECAUTIONS 2
BEFORE YOU BEGIN 4
ASSEMBLY 5
OPERATION AND ADJUSTMENT 7
HOW TO FOLD AND MOVE THE TREADMILL 10
MAINTENANCE AND TROUBLE-SHOOTING 12
CONDITIONING GUIDELINES 14
HOW TO ORDER REPLACEMENT PARTS . . . . . Back Cover

Note: An EXPLODED DRAWING and PART LIST are attached in the centre of this manual. Please save them for future reference.

IMPORTANT PRECAUTIONS

⚠ WARNING: To reduce the risk of burns, fire, electric shock, or injury to persons, read the following important precautions and information before operating the treadmill.

1. **It is the responsibility of the owner to ensure that all users of this treadmill are adequately informed of all warnings and precautions.**
2. **Use the treadmill only as described in this manual.**
3. **Place the treadmill on a level surface, with 2 meters of clearance behind it. Do not place the treadmill on any surface that blocks air openings. To protect the floor or carpet from damage, place a mat under the treadmill.**
4. **When choosing a location for the treadmill, make sure that the location and position permit access to a plug.**
5. **Keep the treadmill indoors, away from moisture and dust. Do not put the treadmill in a garage or covered patio, or near water.**
6. **Do not operate the treadmill where aerosol products are used or where oxygen is being administered.**
7. **Keep children under the age of 12 and pets away from the treadmill at all times.**
8. **The treadmill should not be used by persons weighing more than 115 kg.**
9. **Never allow more than one person on the treadmill at a time.**
10. **Wear appropriate exercise clothing when using the treadmill. Do not wear loose clothing that could become caught in the treadmill. Athletic support clothes are recommended for both men and women. Always wear athletic shoes. Never use the treadmill with bare feet, wearing only stockings, or in sandals.**
11. **When connecting the power cord (see page 7), plug the power cord into an earthed circuit. When replacing the fuse, an ASTA approved BS1362 type should be fitted to the fuse carrier. A 13 amp fuse should be used. No other appliance should be on the same circuit.**
12. **If an extension cord is needed, use only a 3-conductor, 14 gauge (1mm²) cord that is no longer than 1.5 meters.**
13. **Keep the power cord away from heated surfaces.**
14. **Never move the walking belt whilst the power is turned off. Do not operate the treadmill if the power cord or plug is damaged, or if the treadmill is not working properly. (See BEFORE YOU BEGIN on page 4 if the treadmill is not working properly.)**
15. **Never start the treadmill whilst you are standing on the walking belt. Always hold the handrails whilst using the treadmill.**

SUGGESTED STRETCHES

The correct form for several basic stretches is shown in the drawings at the right. Move slowly as you stretch—never bounce.

1. Toe Touch Stretch

Stand with your knees bent slightly and slowly bend forward from your hips. Allow your back and shoulders to relax as you reach down toward your toes as far as possible. Hold for 15 counts, then relax. Repeat 3 times. Stretches: Hamstrings, back of knees and back.

2. Hamstring Stretch

Sit with one leg extended. Bring the sole of the opposite foot toward you and rest it against the inner thigh of your extended leg. Reach toward your toes as far as possible. Hold for 15 counts, then relax. Repeat 3 times for both legs. Stretches: Hamstrings, lower back and groin.

3. Calf/Achilles Stretch

With one leg in front of the other, reach forward and place your hands against a wall. Keep your back leg straight and your back foot flat on the floor. Bend your front leg, lean forward and move your hips toward the wall. Hold for 15 counts, then relax. Repeat 3 times for both legs. To cause further stretching of the achilles tendons, bend your back leg as well. Stretches: Calves, achilles tendons and ankles.

4. Quadriceps Stretch

With one hand against a wall for balance, reach back and grasp one foot with your other hand. Bring your heel as close to your buttocks as possible. Hold for 15 counts, then relax. Repeat 3 times for both legs. Stretches: Quadriceps and hip muscles.

5. Inner Thigh Stretch

Sit with the soles of your feet together and your knees outward. Pull your feet toward your groin area as far as possible. Hold for 15 counts, then relax. Repeat 3 times. Stretches: Quadriceps and hip muscles.

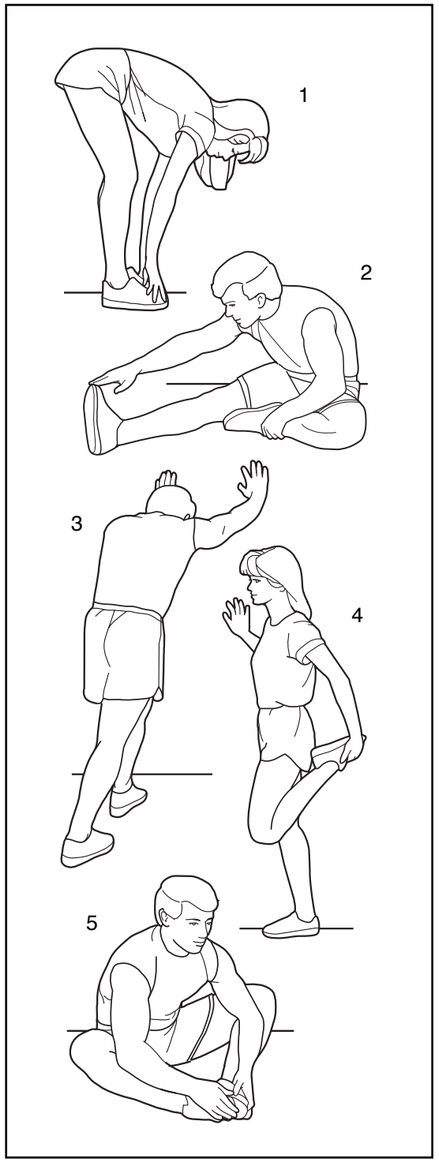

CONDITIONING GUIDELINES

⚠WARNING: Before beginning this or any exercise program, consult your physician. This is especially important for individuals over the age of 35 or individuals with pre-existing health problems.

The pulse sensor is not a medical device. Various factors, including your movement, may affect the accuracy of heart rate readings. The sensor is intended only as an exercise aid in determining heart rate trends in general.

The following guidelines will help you to plan your exercise program. Remember—these are general guidelines only. For more detailed exercise information, obtain a reputable book or consult your physician.

EXERCISE INTENSITY

Whether your goal is to burn fat or to strengthen your cardiovascular system, the key to achieving the desired results is to exercise with the proper intensity. The proper intensity level can be found by using your heart rate as a guide. The chart below shows recommended heart rates for fat burning and aerobic exercise.

HEART RATE TRAINING ZONES (BPM)

PERFORMANCE	165	155	145	140	130	125	115
AEROBIC	145	138	130	125	118	110	103
FAT BURN	125	120	115	110	105	95	90
AGE	20	30	40	50	60	70	80

To find the proper heart rate for you, first find your age near the bottom of the chart (ages are rounded off to the nearest ten years). Next, find the three numbers above your age. The three numbers define your "training zone." The lowest number is the recommended heart rate for fat burning; the middle number is the recommended heart rate for aerobic exercise; and the highest number is for advanced conditioning.

To measure your heart rate during exercise, use the pulse sensor on the treadmill. If your heart rate is too high or too low, adjust the speed and incline of the treadmill.

Fat Burning

To burn fat effectively, you must exercise at a relatively low intensity level for a sustained period of time. During the first few minutes of exercise, your body uses easily accessible carbohydrate calories for energy. Only after the first few minutes does your body begin to use stored fat calories for energy. If your goal is to burn fat, adjust the speed and incline of the treadmill until your heart rate is near the lowest number in your training zone.

Aerobic Exercise

If your goal is to strengthen your cardiovascular system, your exercise must be "aerobic." Aerobic exercise is activity that requires large amounts of oxygen for prolonged periods of time. This increases the demand on the heart to pump blood to the muscles, and on the lungs to oxygenate the blood. For aerobic exercise, adjust the speed and incline of the treadmill until your heart rate is near the middle of your training zone.

High Performance Athletic Conditioning

If your goal is high performance athletic conditioning, adjust the speed and incline of the treadmill until your heart rate is near the highest number in your training zone. Note: During the first few weeks of your exercise program, keep your heart rate near the low end of your training zone.

WORKOUT GUIDELINES

Each workout should include the following three parts:

A Warm-up—Start each workout with 5 to 10 minutes of stretching and light exercise. A proper warm-up increases your body temperature, heart rate, and circulation in preparation for exercise.

Training Zone Exercise—After warming up, increase the intensity of your exercise until your pulse is in your training zone for 20 to 60 minutes. (During the first few weeks of your exercise program, do not keep your pulse in your training zone for longer than 20 minutes.) Breathe regularly and deeply as you exercise—never hold your breath.

A Cool-down—Finish each workout with 5 to 10 minutes of stretching to cool down. This will increase the flexibility of your muscles and will help prevent post-exercise problems.

Exercise Frequency

To maintain or improve your condition, complete three workouts each week, with at least one day of rest between workouts. After a few months, you may complete up to five workouts each week if desired.

16. **The treadmill is capable of high speeds. Adjust the speed in small increments to avoid sudden jumps in speed.**
17. **The pulse sensor is not a medical device. Various factors, including the user's movement, may affect the accuracy of heart rate readings. The pulse sensor is intended only as an exercise aid in determining heart rate trends in general.**
18. **Never leave the treadmill unattended whilst it is running. Always remove the key, unplug the power cord and move the on/off switch to the off position when the treadmill is not in use. (See the drawing on page 4 for the location of the on/off switch.)**
19. **Do not attempt to raise, lower, or move the treadmill until it is properly assembled. (See ASSEMBLY on page 5, and HOW TO MOVE THE TREADMILL on page 10.) You must be able to safely lift 20 kg in order to raise, lower, or move the treadmill.**
20. **Do not change the incline of the treadmill by placing objects under the treadmill.**
21. **When folding or moving the treadmill, make sure that the storage latch is fully closed.**
22. **Inspect and tighten all parts of the treadmill regularly.**
23. **Never drop or insert any object into any opening.**
24. **DANGER: Always unplug the power cord immediately after use, before cleaning the treadmill, and before performing the maintenance and adjustment procedures described in this manual. Never remove the motor hood unless instructed to do so by an authorised service representative. Servicing other than the procedures in this manual should be performed by an authorised service representative only.**
25. **This treadmill is intended for in-home use only. Do not use this treadmill in any commercial, rental, or institutional setting.**

⚠WARNING: Before beginning this or any exercise program, consult your physician. This is especially important for persons over the age of 35 or persons with pre-existing health problems. Read all instructions before using. ICON assumes no responsibility for personal injury or property damage sustained by or through the use of this product.

SAVE THESE INSTRUCTIONS

The decal shown above has been placed on your treadmill in the indicated location. If the decal is missing, or if it is not legible, please call our Customer Service Department to order a free replacement decal (see HOW TO ORDER REPLACEMENT PARTS on the back cover of this manual). Apply the decal in the location shown.

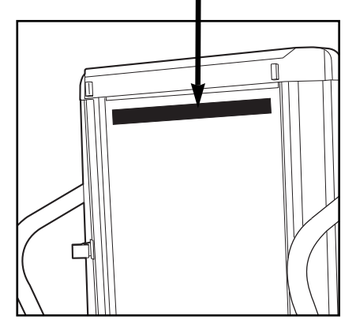

BEFORE YOU BEGIN

Thank you for selecting the WESLO® CADENCE 1000 treadmill. The CADENCE 1000 treadmill combines advanced technology with innovative design to let you enjoy an excellent form of cardiovascular exercise in the convenience and privacy of your home. And when you're not exercising, the unique CADENCE 1000 can be folded up, requiring less than half the floor space of other treadmills.

For your benefit, read this manual carefully before using the treadmill. If you have additional questions, please call our Customer Service Department at **0345-089009**. To help us assist you, please note the product model number and serial number before calling. The model number of the treadmill is WETL48500. The serial number can be found on a decal attached to the treadmill (see the front cover of this manual for the location).

Before reading further, please look at the drawing below and familiarise yourself with the parts that are labelled.

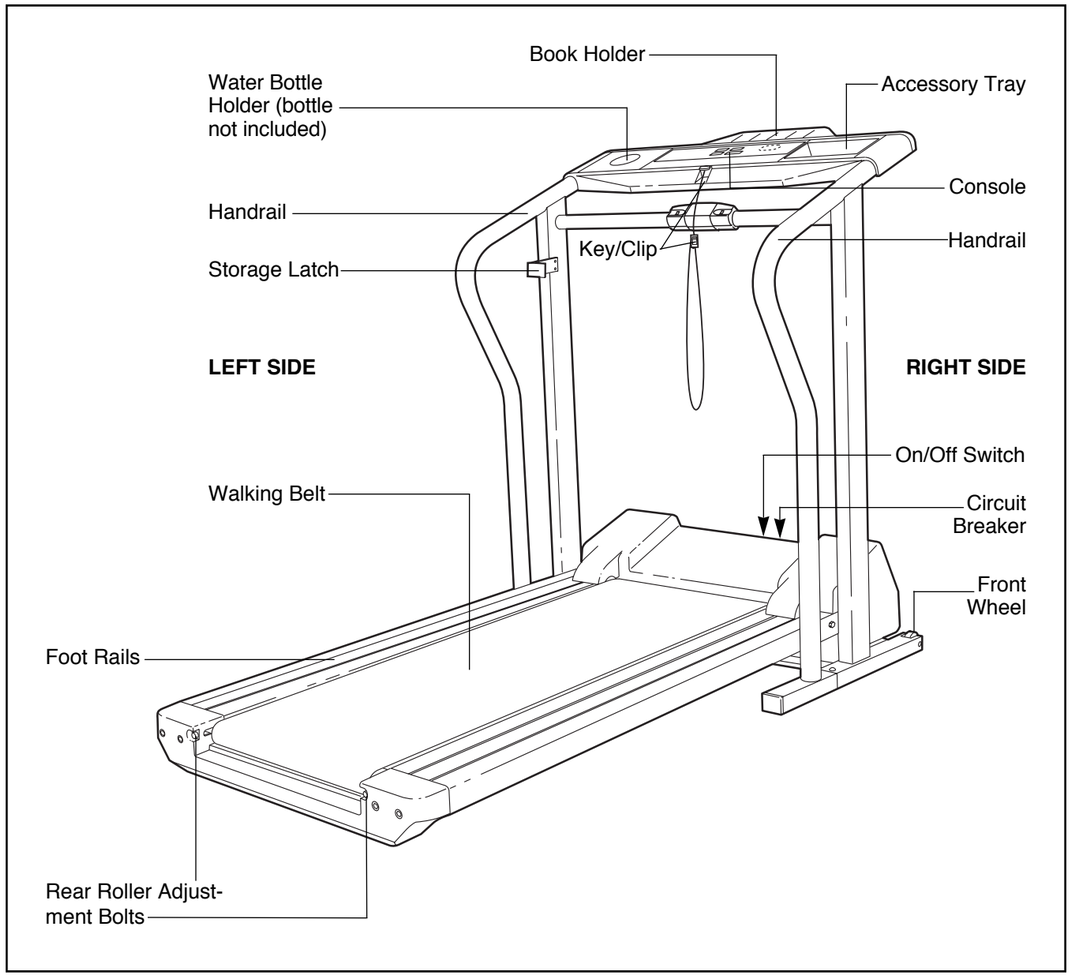

PROBLEM: The walking belt slows when walked on

SOLUTION: a. If an extension cord is needed, use only a 3-conductor, 14-gauge (1mm²) cord that is no longer than 1.5 meters.

b. If the walking belt is overtightened, treadmill performance may decrease and the walking belt may be permanently damaged. Remove the key and **UNPLUG THE POWER CORD**. Using the allen wrench, turn both rear roller adjustment bolts counterclockwise, 1/4 of a turn. When the walking belt is properly tightened, you should be able to lift each side of the walking belt 5 to 7 cm off the walking platform. Be careful to keep the walking belt centred. Plug in the power cord, insert the key and run the treadmill for a few minutes. Repeat until the walking belt is properly tightened.

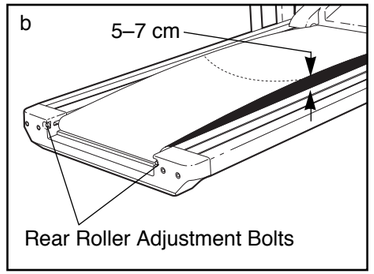

c. If the walking belt still slows when walked on, please call our Customer Service Department.

PROBLEM: The walking belt is off-centre

SOLUTION: a. **If the walking belt has shifted to the left,** first remove the key and **UNPLUG THE POWER CORD**. Using the allen wrench, turn the left rear roller adjustment bolt clockwise, and the right bolt counterclockwise, 1/4 of a turn each. Be careful not to overtighten the walking belt. Plug in the power cord, insert the key and run the treadmill for a few minutes. Repeat until the walking belt is centred.

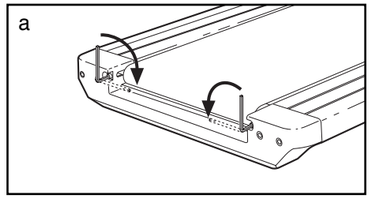

b. **If the walking belt has shifted to the right,** first remove the key and **UNPLUG THE POWER CORD**. Using the allen wrench, turn the left rear roller adjustment bolt counterclockwise, and the right bolt clockwise, 1/4 of a turn each. Be careful not to overtighten the walking belt. Plug in the power cord, insert the key and run the treadmill for a few minutes. Repeat until the walking belt is centred.

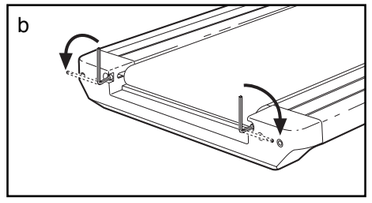

PROBLEM: The walking belt slips when walked on

SOLUTION: a. If the walking belt slips when walked on, first remove the key and **UNPLUG THE POWER CORD**. Using the allen wrench, turn both rear roller adjustment bolts clockwise, 1/4 of a turn. When the walking belt is correctly tightened, you should be able to lift each side of the walking belt 5 to 7 cm off the walking platform. Be careful to keep the walking belt centred. Plug in the power cord, insert the key and carefully walk on the treadmill for a few minutes. Repeat until the walking belt is properly tightened.

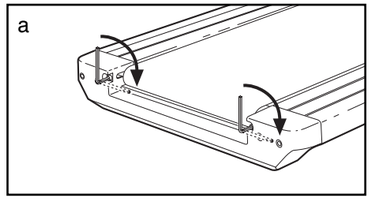

MAINTENANCE AND TROUBLE-SHOOTING

Most treadmill problems can be solved by following the steps below. Find the symptom that applies, and follow the steps listed. If further assistance is needed, please call our Customer Service Department.

PROBLEM: The power does not turn on

SOLUTION: a. Make sure that the power cord is plugged into a properly earthed outlet. (See HOW TO PLUG IN THE POWER CORD on page 7.) If an extension cord is needed, use only a 3-conductor, 14-gauge (1mm²) cord that is no longer than 1.5 meters.

b. After the power cord has been plugged in, make sure that the key is fully inserted into the console.

c. Check the circuit breaker located on the treadmill near the power cord. If the switch protrudes as shown, the circuit breaker has tripped. To reset the circuit breaker, wait for five minutes and then press the switch back in.

d. Check the on/off switch located at the front of the treadmill near the power cord. The switch must be in the on position.

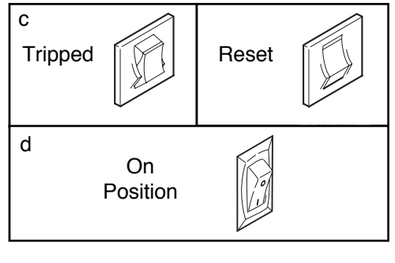

PROBLEM: The power turns off during use

SOLUTION: a. Check the circuit breaker located on the treadmill frame near the power cord (see 1. c. above). If the circuit breaker has tripped, wait for five minutes and then press the switch back in.

b. Make sure that the power cord is plugged in.

c. Remove the key from the console. Reinsert the key fully into the console.

d. Make sure that the on/off switch is in the on position. (See 1. d. above.)

e. If the treadmill still will not run, please call our Customer Service Department.

PROBLEM: The displays of the console do not function properly

SOLUTION: a. Remove the key from the console and **UNPLUG THE POWER CORD.** Next, remove the screws from the hood and carefully remove the hood. Locate the Reed Switch (97) and the Magnet (9) on the left side of the Pulley (10). Turn the Pulley until the Magnet is aligned with the Reed Switch. **Check the gap between the Magnet and the Reed Switch—it should be about 3 mm.** If necessary, loosen the Screw (43) and move the Reed Switch slightly. Retighten the Screw. Reattach the hood and run the treadmill for a few minutes to check for a correct speed reading.

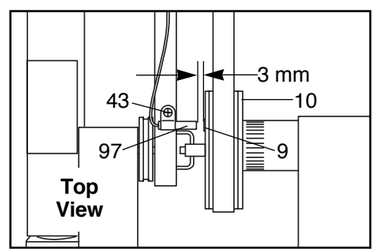

ASSEMBLY

Assembly requires two people. Set the treadmill in a cleared area and remove all packing materials. Do not dispose of the packing materials until assembly is completed. **Assembly requires the included allen wrench and your own phillips screwdriver , adjustable spanner , and scissors .**

Note: The underside of the treadmill walking belt is coated with high-performance lubricant. During shipping, a small amount of lubricant may be transferred to the top of the walking belt or the shipping carton. This is a normal condition and does not affect treadmill performance. If there is lubricant on top of the walking belt, simply wipe off the lubricant with a soft cloth and a mild, non-abrasive cleaner.

If further assistance is needed, please call our Customer Service Department at 0345-089009.

1. With the help of a second person, carefully raise the treadmill to the upright position.

   Whilst the other person tips the treadmill to one side and holds it, insert an Extension Leg (59) into one side of the Base (32). Make sure that the Extension Leg is turned so the bracket is on the side shown. Using the Allen Wrench (102), tighten an Extension Leg Screw (57) into the Extension Leg and the Base. Attach the other Extension Leg in the same manner.

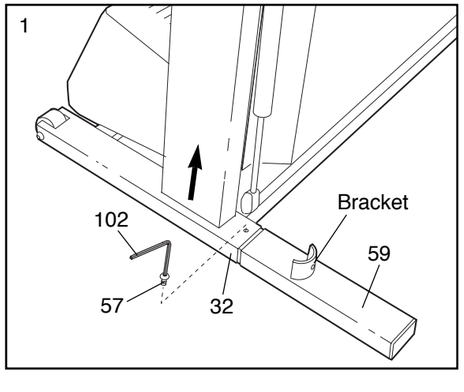

2. Refer to HOW TO LOWER THE TREADMILL FOR USE on page 11. Follow the instructions in step 2 to lower the treadmill.

   Cut the plastic ties holding the cage nuts in the upper end of each Handrail (60, 62).

   Position the Left Handrail (60) on the left Upright (32) as shown. The bracket on the Extension Leg (59) should be **inside** of the lower end of the Left Handrail (see the inset drawing). Thread two Handrail Bolts (30) with Handrail Washers (40) into the left Upright and the Left Handrail. **Do not tighten the Handrail Bolts yet.**

   Whilst another person holds the Console Base (46), attach the Right Handrail (62) in the same way. **Be careful to avoid damaging the Wire Harness (35).**

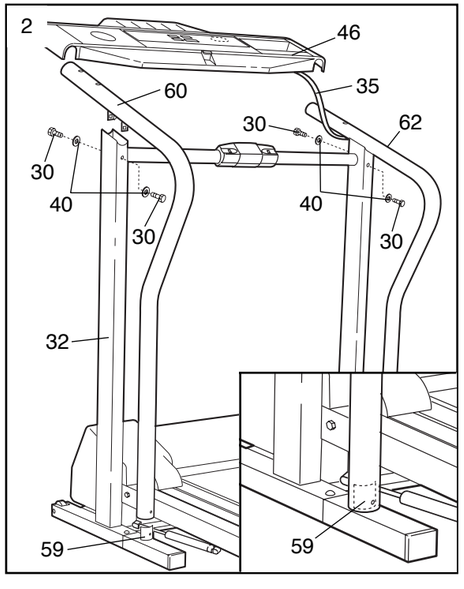

3. Set the Console Base (46) on the Handrails (60, 62). Route the Wire Harness (35) under the Console Base as shown and then press the Wire Harness up into the Console Base. Insert any slack into the Right Handrail (62).

   Attach the Console Base (46) to the Handrails (60, 62) with the four 1 3/4” Handrail Screws (90).

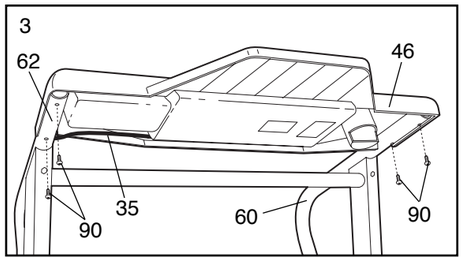

4. Attach the Storage Latch (34) and the two Latch Spacers (33) to the left Upright (32) with two Screws (28). **Be careful not to overtighten the Screws.**

   Note: If it is difficult to fold or lower the treadmill, remove one or both of the Latch Spacers (33).

   Fold the treadmill to the storage position (see HOW TO FOLD THE TREADMILL FOR STORAGE on page 10).

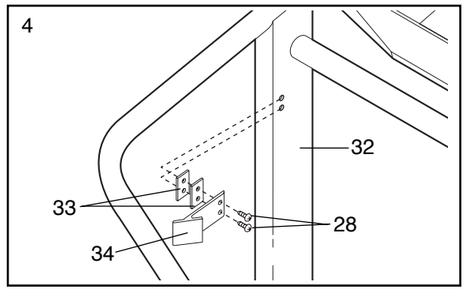

5. Attach the lower end of the Right Handrail (62) to the right Extension Leg (59) with a 3/4” Screw (28).

   Attach the lower end of the Left Handrail (60) in the same way.

   Tighten all parts used in this step and in step 2.

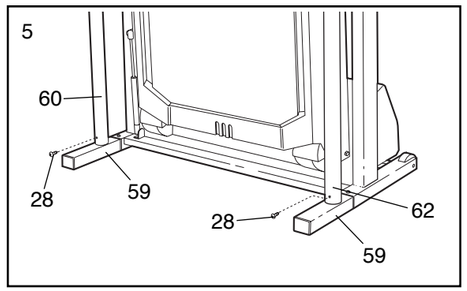

6. The console requires three 1,5V batteries; alkaline batteries are recommended. Open the Battery Cover (23) as shown. Insert two batteries into the battery compartment, **with the negative (–) ends of the batteries touching the springs.** Close the battery cover, push up on the battery cover tab, and then push the tab forward as shown in the inset drawing. Be sure that the tab locks into place.

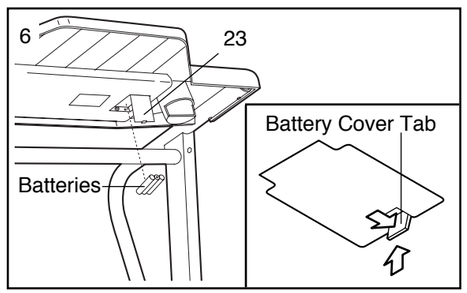

7. **Make sure that all parts are properly tightened before you use the treadmill.** Note: After the treadmill is assembled, some hardware may be left over. Save the included allen wrench for adjusting the walking belt. To protect the floor or carpet from damage, place a mat under the treadmill.

HOW TO LOWER THE TREADMILL FOR USE

1. Hold the upper end of the treadmill with your right hand as shown. Using your left thumb, press the storage latch and hold it. Pivot the treadmill until the frame is past the storage latch.

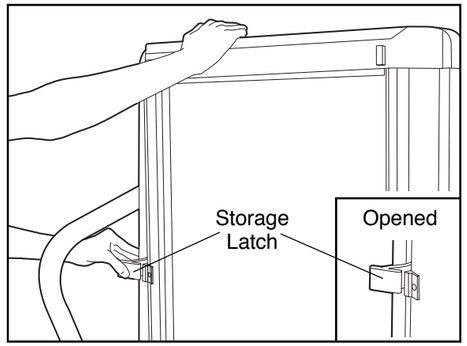

2. Hold the treadmill firmly with both hands, and lower the treadmill to the floor. **Caution: To decrease the possibility of injury, bend your legs and keep your back straight.**

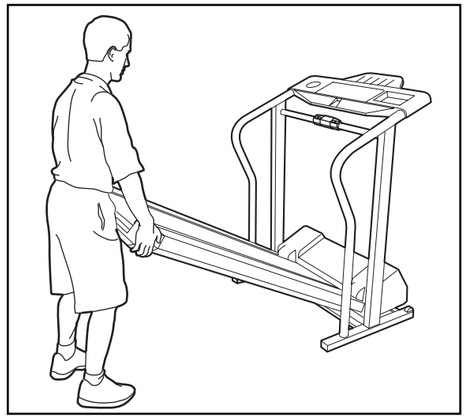

HOW TO FOLD AND MOVE THE TREADMILL

HOW TO FOLD THE TREADMILL FOR STORAGE

Before folding the treadmill, adjust the incline to the lowest position. If this is not done, the treadmill may be permanently damaged. Next, unplug the power cord. CAUTION: You must be able to safely lift 20 kg in order to raise, lower, or move the treadmill.

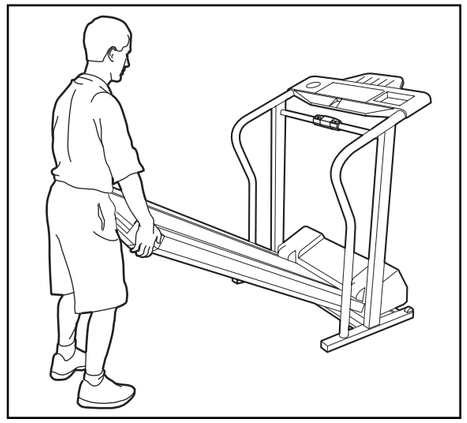

1. Hold the treadmill with your hands in the locations shown at the right. **Caution: To decrease the possibility of injury, bend your legs and keep your back straight. As you raise the treadmill, make sure to lift with your legs rather than your back.** Raise the treadmill about halfway to the vertical position.

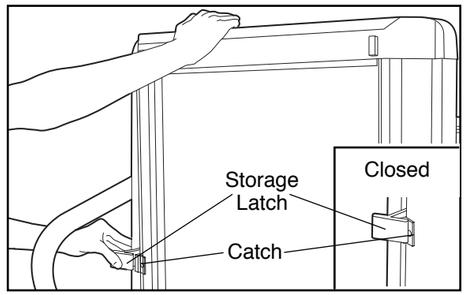

2. Move your right hand to the position shown and hold the treadmill firmly. Using your left thumb, press the storage latch to the left as you raise the treadmill to the storage position. **Make sure that the storage latch is fully engaged over the catch.**

   To protect the floor or carpet from damage, place a mat under the treadmill. Keep the treadmill out of direct sunlight. Do not leave the treadmill in the storage position in temperatures above 30° Celsius.

HOW TO MOVE THE TREADMILL

Before moving the treadmill, convert the treadmill to the storage position as described above. **Make sure that the storage latch is closed fully over the catch.**

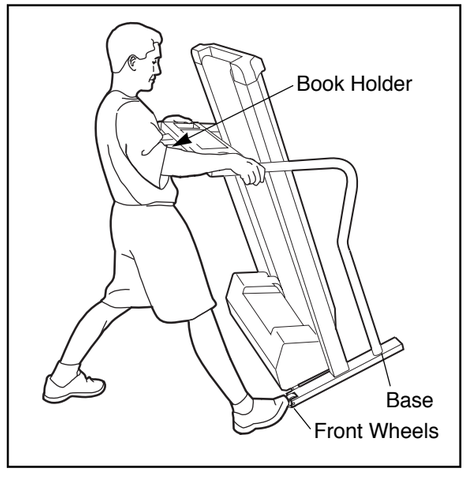

1. Hold the handrails as shown and place one foot against a wheel. **Do not hold or push on the book holder or the book holder may be damaged.**
2. Tilt the treadmill back until it rolls freely on the front wheels. Carefully move the treadmill to the desired location. **Never move the treadmill without tipping it back. To reduce the risk of injury, use extreme caution whilst moving the treadmill. Do not attempt to move the treadmill over an uneven surface.**
3. Place one foot on the base, and carefully lower the treadmill until it is resting in the storage position.

OPERATION AND ADJUSTMENT

THE PERFORMANT LUBE™ WALKING BELT

Your treadmill features a walking belt coated with PERFORMANT LUBE™, a high-performance lubricant. **IMPORTANT: Never apply silicone spray or other substances to the walking belt or the walking platform. Such substances will deteriorate the walking belt and cause excessive wear.**

HOW TO PLUG IN THE POWER CORD

This product must be earthed. If it should malfunction or break down, earthing provides a path of least resistance for electric current to reduce the risk of electric shock. This product is equipped with a cord having an equipment-earthing conductor and an earthing plug.

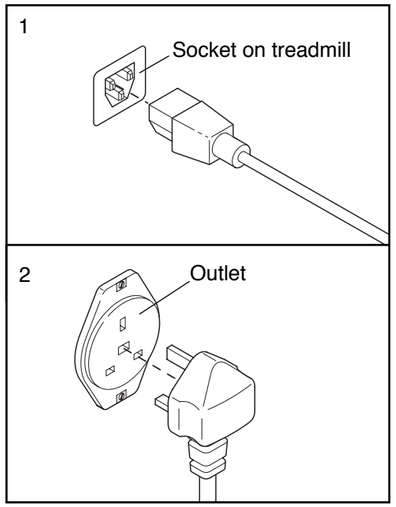

Two power cords are included. Select the one that will fit your outlet. Refer to drawing 1. Plug the indicated end of the power cord into the socket on the treadmill. Refer to drawing 2. Plug the power cord into an appropriate outlet that is properly installed and earthed in accordance with all local codes and ordinances. Note: In Italy, an adapter (not included) must be used between the power cord and the outlet. Important: The treadmill is not compatible with GFCI-equipped outlets.

Use only a power cord type H05VV-F with a conductor of at least 1mm², with a country recognised plug and an appliance coupler.

⚠DANGER: Improper connection of the equipment-earthing conductor can result in an increased risk of electric shock. Check with a qualified electrician or serviceman if you are in doubt as to whether the product is properly earthed. Do not modify the plug provided with the product—if it will not fit the outlet, have a proper outlet installed by a qualified electrician.

DIAGRAM OF THE CONSOLE

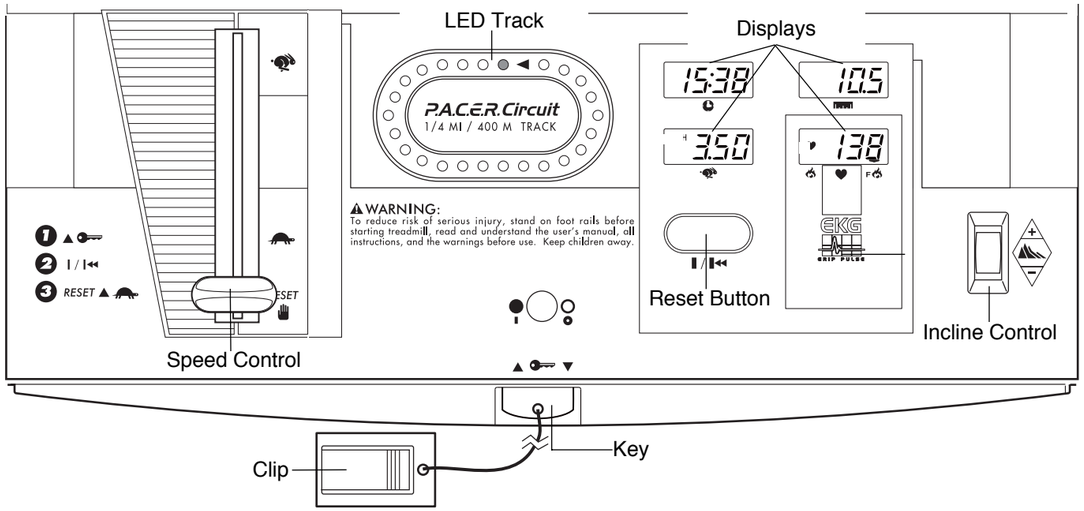

⚠ CAUTION: Before operating the console, read the following precautions.

- **Do not stand on the walking belt when turning on the power.**
- **Always wear the clip (see the drawing above) whilst using the treadmill.**
- **Adjust the speed in small increments.**
- **To reduce the possibility of electric shock, keep the console dry. Avoid spilling liquids on the console and use only a sealable water bottle.**

STEP-BY-STEP CONSOLE OPERATION

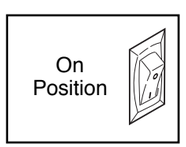

If there is a thin sheet of clear plastic on the face of the console, remove it. Next, make sure that the power cord is properly plugged in (see HOW TO PLUG IN THE POWER CORD on page 7). Be sure that the on/off switch near the power cord is in the on position.

Stand on the foot rails of the treadmill. Find the clip attached to the key (see the drawing above), and slide the clip onto the waistband of your clothing.

Follow the steps below to operate the console.

1 Insert the key fully into the power switch.

After a moment, the four displays and one indicator in the LED track will light.

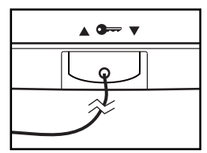

2 Reset the speed control.

Slide the speed control to the RESET position. **Note: Each time the walking belt is stopped, the speed control must be moved to the RESET position before the walking belt can be restarted.**

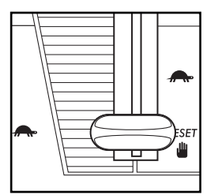

3 Start the walking belt.

Slowly slide the speed control up until the walking belt begins to move at slow speed. Step onto the walking belt and begin exercising. Change the speed of the walking belt as desired by sliding the speed control.

To stop the walking belt, step onto the foot rails and slide the speed control to the RESET position. After a few seconds, the displays will pause.

4 Follow your progress with the LED track and the four displays.

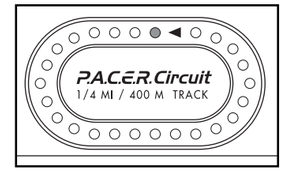

The LED Track—The LED track represents a distance of 1/4 mile. As you exercise, the indicators around the track will light one at a time until you have completed 1/4 mile. A new lap will then begin.

TIME display—This display shows the total time that you have walked since the display was reset.

DISTANCE/LAPS display—This display shows the distance that you have walked and the number of laps you have completed. The display will change from one number to the other every seven seconds. An "L" will appear when the number of laps is shown. Note: If the KPH indicator is lit, the distance will be shown in kilometres; if the indicator is not lit, the distance will be shown in miles.

SPEED display—This display shows the speed of the walking belt, in miles per hour or kilometres per hour. If the KPH indicator is lit, the speed will be displayed in kilometres per hour. Note: To change the unit of measurement, hold down the reset button for about seven seconds.

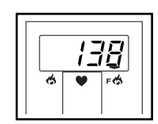

CALS/FAT CALS/ PULSE display—This display shows the approximate numbers of calories and fat calories you have burned. (See FAT BURNING on page 14.) Every seven seconds, the display will change from one number to the other. The fat indicator will light when the number of fat calories is shown. Note: This display also shows your pulse when the pulse sensor is used.

Note: If the walking belt is stopped and no console buttons are pressed for five minutes, the displays will automatically turn off. To light the displays, press the reset button.

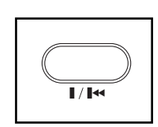

To reset the displays, press the reset button. The displays will darken for a moment and then light.

5 Measure your pulse, if desired.

Note: When using the pulse sensor, make sure that your hands are clean. The pulse sensor should also be kept clean with a damp cloth and mild detergent.

To measure your pulse, stand on the foot rails and place **both thumbs** on the pulse sensors as shown. **Do not press too hard, or the circulation in your thumbs will be restricted and your pulse will not be detected.** Next, wait until the heart-shaped indicator in the CALORIES/FAT CALORIES/ PULSE display flashes **steadily**. After a few seconds, three dashes will appear in the display and your pulse will be shown. Hold your thumbs on the sensor for another 15 seconds for the most accurate reading.

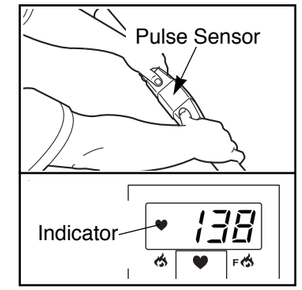

If the displayed pulse appears to be too high or too low, or if your pulse is not displayed, lift your thumbs off the sensors and allow the display to reset. Then, place your thumbs on the sensors as described above. Try the pulse sensor several times until you become familiar with it. Remember to stand still while measuring your pulse.

6 Change the incline of the treadmill, if desired.

To change the incline, hold down the top or bottom of the incline control until the desired incline level is reached.

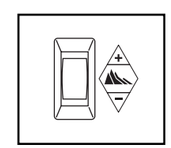

7 When you are finished exercising, stop the walking belt and remove the key.

Step onto the foot rails, stop the walking belt, and remove the key from the console. Store the key in a secure place.

PART LIST—Model No. WETL48500

R0700A

Key No.	Qty.	Description
1	1	Frame
2	11	Electronic Screw
3	1	Catch
4	1	Rear Roller
5	2	Roller Guard
6	4	Platform Screw
7	2	Foot Rail
8	1	Walking Platform
9	1	Magnet
10	1	Front Roller/Pulley
11	1	Walking Belt
12	2	Rear Isolator
13	2	Rear Isolator Bolt
14	1	Latch Warning Decal
15	11	Belly Pan Screw
16	1	Belly Pan
17	4	Isolator
18	2	Frame Pivot Bolt
19	4	Bracket Screw
20	1	Hood
21	1	Key/Clip
22	1	Book Rack
23	2	Battery Cover
24	1	Console Warning Decal
25	1	Incline Control
26	1	Speed Control
27	1	Speed Potentiometer
28	10	3/4” Screw
29	5	Rear Platform Screw
30	4	Handrail Bolt
31	5	Releasable Wire Clamp
32	1	Upright/Base
33	2	Latch Spacer
34	1	Storage Latch
35	1	Wire Harness
36	2	Grommet
37	1	Incline Motor Nut
38	4	Cage Nut
39	2	Incline Leg Pivot Bolt
40	8	Adj./Handrail Washer
41	6	Incline Leg Pivot Nut
42	1	Incline Cover Shield
43	2	Belly Pan Side Screw
44	1	Incline Motor Spacer
45	1	Incline Motor
46	1	Console Base
47	1	Incline Stop Bracket
48	1	Incline Bolt
49	1	Shock
50	1	Incline Cover
51	1	Cotter Pin
52	1	Clevis Pin
53	2	Wheel Bolt
54	6	Base Pad Screw
55	4	Base Pad
56	2	Frame Spacer
57	2	Extension Leg Screw
58	4	Isolator Nut
59	2	Extension Leg
60	1	Left Handrail
61	2	Extension Leg Endcap
62	1	Right Handrail
63	1	Rear Endcap
64*	1	Console Assembly
65	2	Front Wheel
66	1	Motor/Pulley/ Flywheel/Fan
67	1	Motor Pivot Bolt
68	1	Motor Tension Nut
69	2	Motor Star Washer
70	1	Motor Tension Washer
71	1	Motor Tension Bolt
72	1	Motor Belt
73	1	Pulley/Flywheel/Fan
74	1	Motor
75	5	8” Wire Tie
76	2	Belt Guide
77	1	Endcap Foot (Left)
78	8	Hood/Belt Guide Screw
79	2	Rear Roller Adj. Bolt
80	5	Hood Anchor
81	1	Circuit Breaker
82	1	Receptacle
83	1	Filter
84	1	On/Off Switch
85	1	Outlet Bracket
86	4	Hood Bracket
87	2	Spacer
88	1	Power Supply
89	1	Electronics Bracket
90	4	1 3/4” Handrail Screw
91	1	Controller
92	1	Front Roller Adj. Bolt
93	1	Incline Leg
94	1	Choke Plate
95	1	Choke
96	1	Clip
97	1	Reed Switch
98	10	Belly Pan/Clip Screw
99	1	Front Belly Pan
100	1	Ground Wire
101	2	Plastic Bushing
102	1	Allen Wrench
103	1	Endcap Plug
104	6	Endcap Fastener
105	1	Endcap Foot (Right)
106	4	Endcap Bolt
107	1	4 1/2” Spacer
108	3	Nylon Washer
109	8	Cover Screw
110	2	Power Bracket Star Washer
111	1	Ground Screw
112	1	Ground Washer
113	1	Ground Nut
114	1	Motor Pivot Sleeve
115	1	Pulse Bar Assembly
116	1	Power Cord Set
117	2	Rear Isolator Washer
118	1	25” Pulse Wire Harness
#	1	4” White Pig Tail, M/F Crimp
#	1	8” Green/Yellow Wire, F/Ring
#	1	4” White Pig Tail M/F
#	1	14” White Wire, 2 F
#	1	8” White Wire, 2 F
#	1	8” Black Wire, M/F
#	1	4” Black Wire, 2 F
#	1	14” Black Wire, 2 F
#	1	User’s Manual
#	1	4” Blue Wire, Pigtail

* Includes all parts shown in the box

\# These parts are not illustrated

REMOVE THIS EXPLODED DRAWING AND PART LIST FROM THE MANUAL. Save this page for future reference.

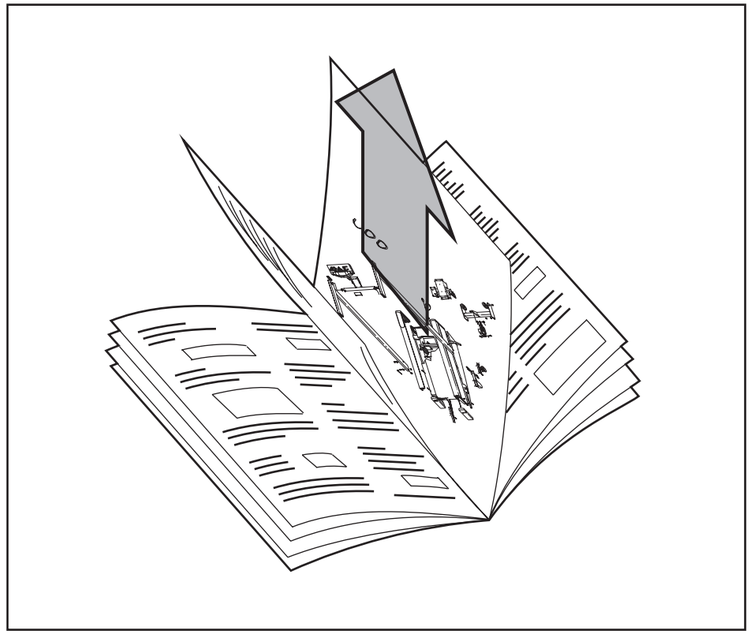

Note: Specifications are subject to change without notice. For information about ordering replacement parts, see the back cover of the User’s Manual.

EXPLODED DRAWING—Model No. WETL48500
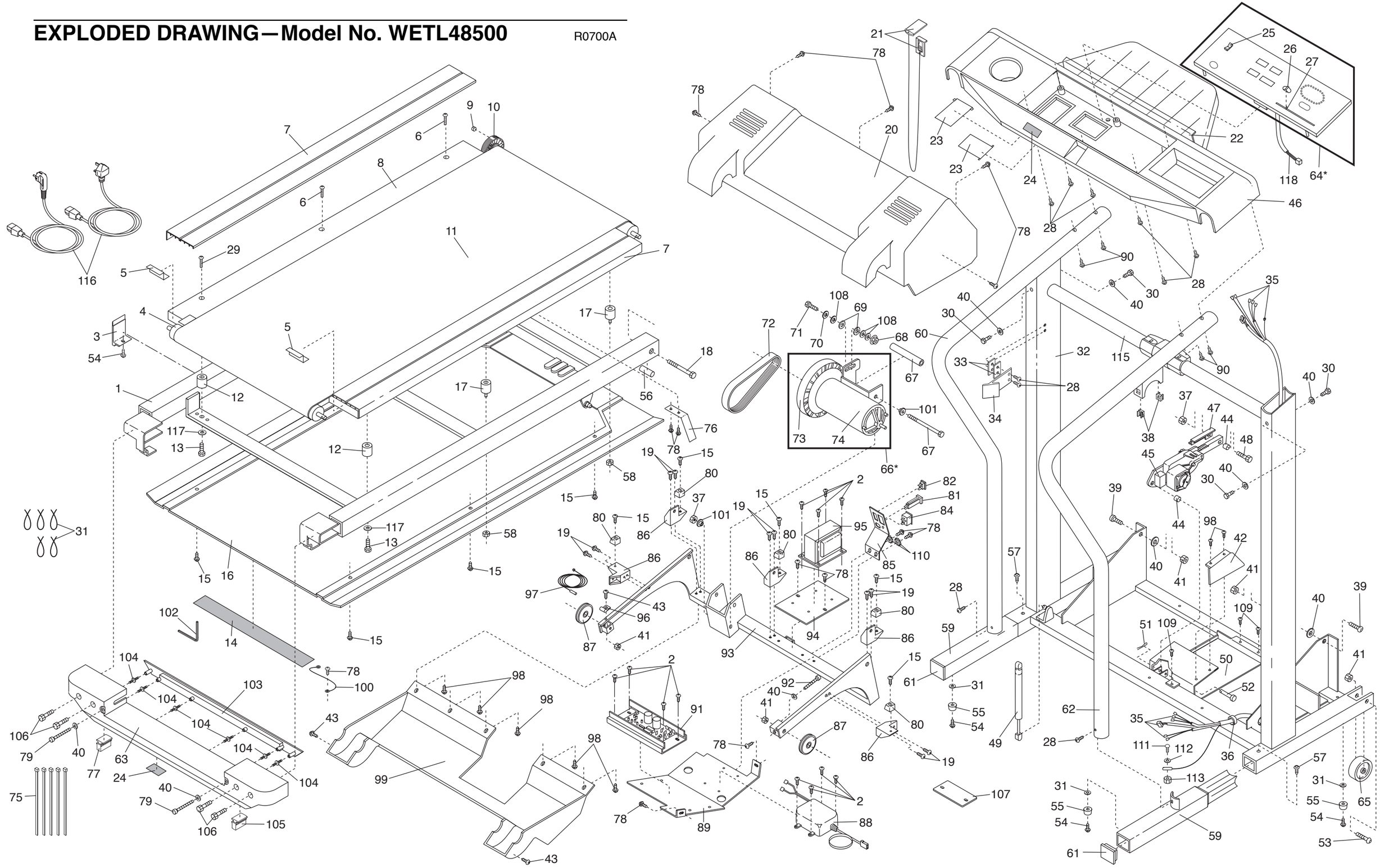
R0700A